Systemadministration

Linux

Hantering av Linux servrar

Agenda

1. Installera program
2. ’Tarballs’
3. Processer
4. Initialization System
5. SysV Init
6. systemd
7. Loggar
8. Boot Process
9. SSH Client

Installera program

Packages

Package manager

- Installs packages & their dependencies
- Updates packages
- Uninstalls packages

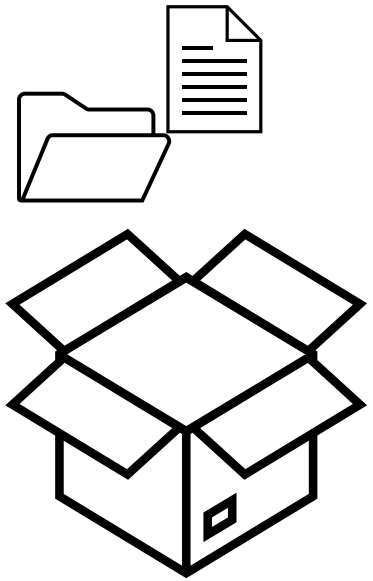

Repository

Innehåller paket & information om dom

Repon är distributions specifika

- Official repository
  hanteras utav distron
- Third-party repositories

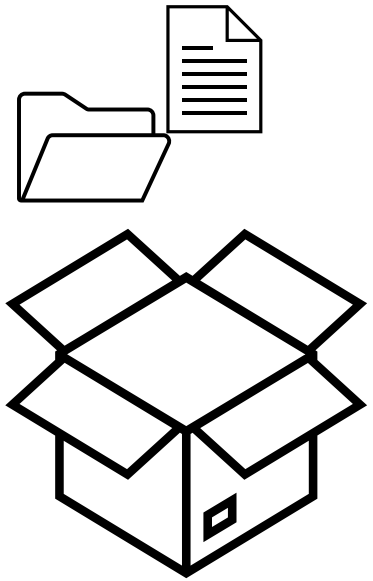

Mirrors

Flera distributioner gör det möjligt att ’**spegla**’ det officiella **repot**

Ex.

Mirrors:

ftp.se.debian.org
debian.lth.se
debian.mirror.su.se
ftp.acc.umu.se
ftpmirror1.infania.net
mirrors.glesys.net
mirror.zetup.net

Repository:

debian.org

Local Mirror

Har man en större mängd Linux servrar bör ha en lokal mirror

Framförallt om man använder en kommunitydriven distribution

Package Managers

Debian:

- **apt**
- **apt-get**
- **aptitude**
- **dpkg**

RHEL:

- **dnf**
- **yum**

SUSE:

- **zypper**

Alpine:

- **apk**

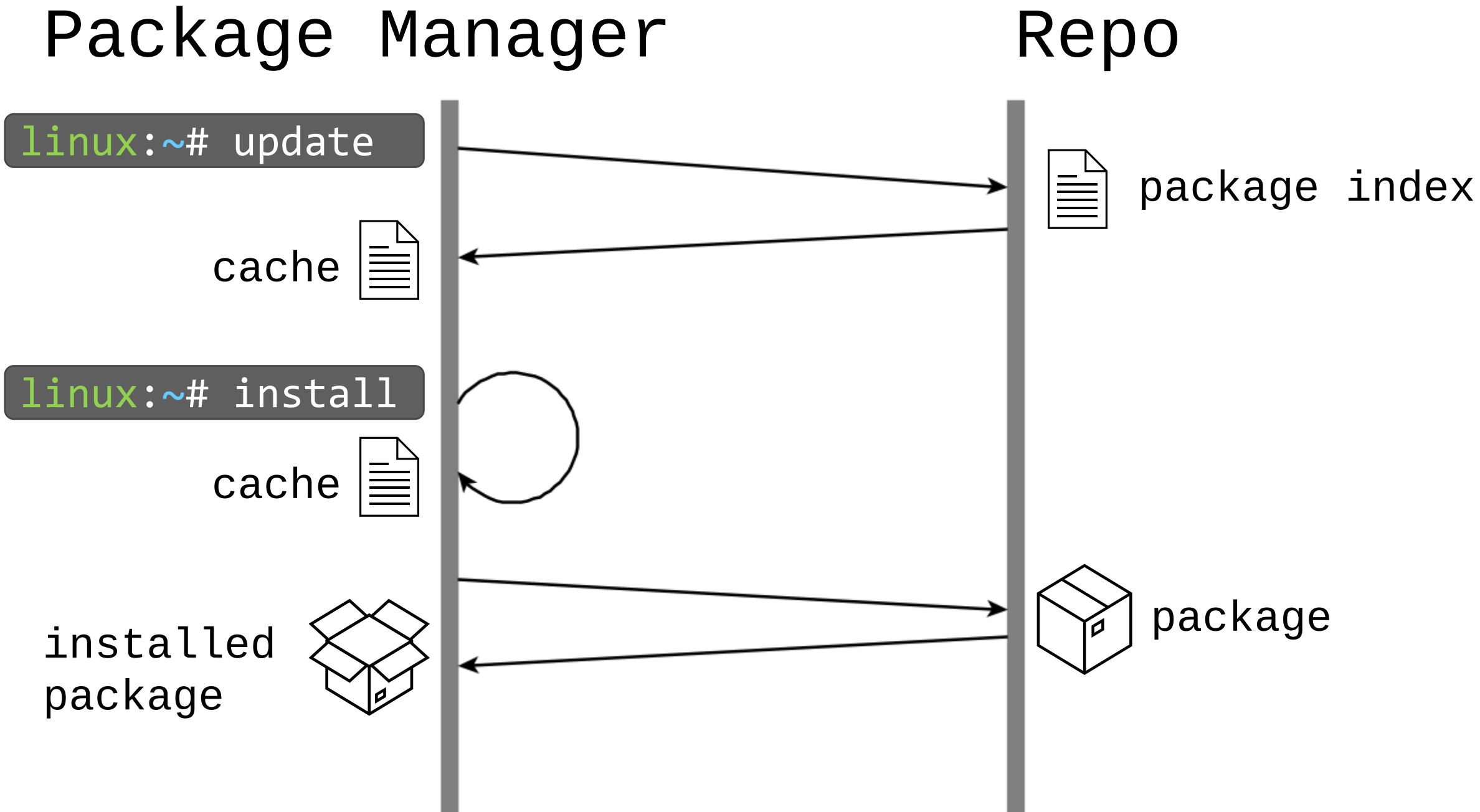
Package Manager
Repo
linux:~# update
package index
cache
linux:~# install
cache
installed package
package

Hur installerar man något om det inte finns i det officiella repot?

- **Third-party repository**
  Installera från utvecklarens egna repo
- **‘Tarballs’**
  Ladda ner komprimerat arkiv och installera med utvecklarens verktyg/instruktioner
- **From Source**
  Ladda ner, kompilera & installera manuellt

‘Tarballs’

tape archive

Kommandot samlar flera filer/kataloger till en fil

'tarball'

```
nics@linux:~$ tar -cvf logs.tar /var/log/
nics@linux:~$ ls
logs.tar
nics@linux:~$ file logs.tar
logs.tar: POSIX tar archive (GNU)
```

Compressed Archive

Vanligt vis komprimeras ’**tarballs**’ med **gzip**

```
nics@linux:~$ gzip logs.tar
nics@linux:~$ ls
logs.tar.gz
nics@linux:~$ file logs.tar.gz
logs.tar.gz: gzip compressed data, was "logs.tar"
```

för fler **tar** & **gzip** kommandon se cheat-sheet

Processer

Process

"[…] a program in execution is termed a **process**"

Silberschatz, A., Galvin, P. B. & Gagne, G. (2019). Multiprogramming and Multitasking. *Operating System Concepts 9th ed* (pp. 23). Wiley.

Process metadata

PID (Process Id)	Unikt nummer, identifierar processen
User	Vilken användaren som kör processen
PPID (Parent PID)	Vilken överordnad process som hanterar processen (om någon)

Process

Visar processer i UNIX-liknande OS

Huvudsakligen 3 varianter

- UNIX ps
- BSD ps
- GNU ps

```
nics@linux:~$ ps
    PID TTY          TIME CMD
   3614 pts/0    00:00:00 bash
   4169 pts/0    00:00:00 ps
```

Linux Process

Filtrera på en viss användare

```
nics@linux:~$ ps U root
```

Visa alla processer med detaljerad information

```
nics@linux:~$ sudo ps aux
```

Visa som trädvy

```
nics@linux:~$ sudo ps axjf
```

top

```
nics@linux:~$ sudo top
```

```
top - 10:28:54 up 17:08,  2 users,  load average: 0.00, 0.00, 0.00
Tasks: 105 total,   1 running, 104 sleeping,   0 stopped,   0 zombie
%Cpu(s):  0.0 us,  0.3 sy,  0.0 ni, 99.0 id,  0.3 wa,  0.0 hi,  0.3 si,  0.0 st
MiB Mem :    892.8 total,    123.5 free,    223.3 used,    546.1 buff/cache
MiB Swap:   2048.0 total,   2046.7 free,      1.3 used.    501.0 avail Mem

    PID USER      PR  NI    VIRT    RES    SHR S  %CPU  %MEM     TIME+ COMMAND
   4336 root      20   0       0      0      0 I   1.3   0.0   0:00.29 kworker/u2:0-events_power_efficient
   4294 root      20   0       0      0      0 I   0.7   0.0   0:00.66 kworker/0:2-events
      1 root      20   0  102012  13168   8436 S   0.0   1.4   0:08.04 systemd
      2 root      20   0       0      0      0 S   0.0   0.0   0:00.00 kthreadd
      3 root       0 -20       0      0      0 I   0.0   0.0   0:00.00 rcu_gp
      4 root       0 -20       0      0      0 I   0.0   0.0   0:00.00 rcu_par_gp
      5 root       0 -20       0      0      0 I   0.0   0.0   0:00.00 slub_flushwq
      6 root       0 -20       0      0      0 I   0.0   0.0   0:00.00 netns
      8 root       0 -20       0      0      0 I   0.0   0.0   0:00.00 kworker/0:0H-events_highpri
     10 root       0 -20       0      0      0 I   0.0   0.0   0:00.00 mm_percpu_wq
     11 root      20   0       0      0      0 S   0.0   0.0   0:00.00 rcu_tasks_rude_
     12 root      20   0       0      0      0 S   0.0   0.0   0:00.00 rcu_tasks_trace
     13 root      20   0       0      0      0 S   0.0   0.0   0:00.50 ksoftirqd/0
     14 root      20   0       0      0      0 I   0.0   0.0   0:00.98 rcu_sched
     15 root      rt   0       0      0      0 S   0.0   0.0   0:00.33 migration/0
     16 root     -51   0       0      0      0 S   0.0   0.0   0:00.00 idle_inject/0
```

top alternatives

htop

```
CPU[|                                                          0.7%]
Mem[||||||||||||||||||||||||||||||||||||||||||||||||||||||||| 223M/927M]
Swp[|                                                       2.27M/2.00G]

  PID USER      PRI  NI  VIRT   RES   SHR S CPU%▽MEM%   TIME+  Com
    1 root       20   0   99M 13168  8436 S  0.0  1.4  0:08.05 /sb
  360 root       19  -1 80652 25996 24828 S  0.0  2.7  0:00.92 /li
  393 root       RT   0  282M 27236  9072 S  0.0  2.9  0:04.36 /sb
  397 root       20   0 26136  7100  4776 S  0.0  0.7  0:00.38 /li
  398 root       20   0  282M 27236  9072 S  0.0  2.9  0:00.00 /sb
  399 root       RT   0  282M 27236  9072 S  0.0  2.9  0:00.00 /sb
  400 root       RT   0  282M 27236  9072 S  0.0  2.9  0:00.00 /sb
  401 root       RT   0  282M 27236  9072 S  0.0  2.9  0:00.08 /sb
  402 root       RT   0  282M 27236  9072 S  0.0  2.9  0:03.51 /sb
```

atop

```
cpu  menu  preset *                    10:37:05                    - 2000ms +
                                                   i7-7500  2.9 GHz
                                                   CPU                  0
                                                   C0                   0
                                                   LAV: 0.00 0.02 0.0
up 17:16:32

mem                          disks        io
Total:   892 MiB             root        62G
U        390 MiB             IO
A        502 MiB             U          8.2G
C        443 MiB             swap         2T
F        128 MiB             U          2.3M
                             boot       1.9G
                             IO
                             U          247M

net   auto  zero  <b eth0 n>
10K                download
                   ▼ 80 Byte/s
                   ▲ 359 Byte/s
10K                upload

proc  filter        tree  < cpu lazy >
  Pid: Program  User:  MemB        Cpu%
 4584 btop     root   5.9M         0.0
 4357 kworker  root     0B         0.0
 4336 kworker  root     0B         0.0
 4219 kworker  root     0B         0.0
 4544 kworker  root     0B         0.0
 3428 fwupd    root    30M         0.0
    1 systemd  root    13M         0.0
 3613 sshd     vagr+  7.9M         0.0
  393 multipa  root    27M         0.0
 4266 kworker  root     0B         0.0
 3519 sshd     root    11M         0.0
 1732 snapd    root    30M         0.0
  681 ifplugd  root   1.6M         0.0
select  info  signals                0/10
```

Signals

Kommunicerar med en process med *signaler*

De viktigaste:

Signal	Name	Description
HUP	Hangup	Usually restarts the process
TERM	Terminate	Request termination, the process cleans up and exits
KILL	Kill	The kernel forces immediate termination without signaling the process

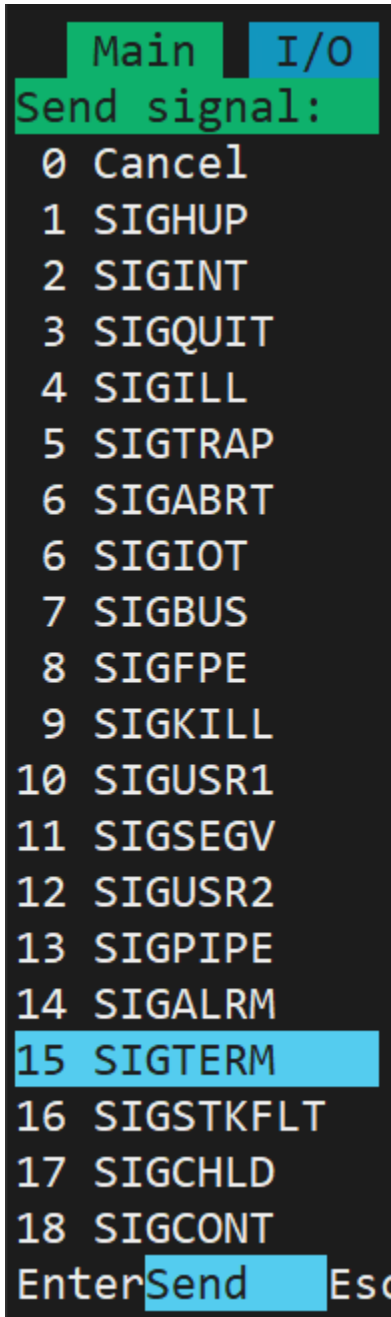

Signals

Kommunicerar med en process med *signaler*

De viktigaste:

Signal	Name	Description
HUP	Hangup	Usually restarts the process
TERM	Terminate	Request termination, the process cleans up and exits
KILL	Kill	The kernel forces immediate termination without signaling the process

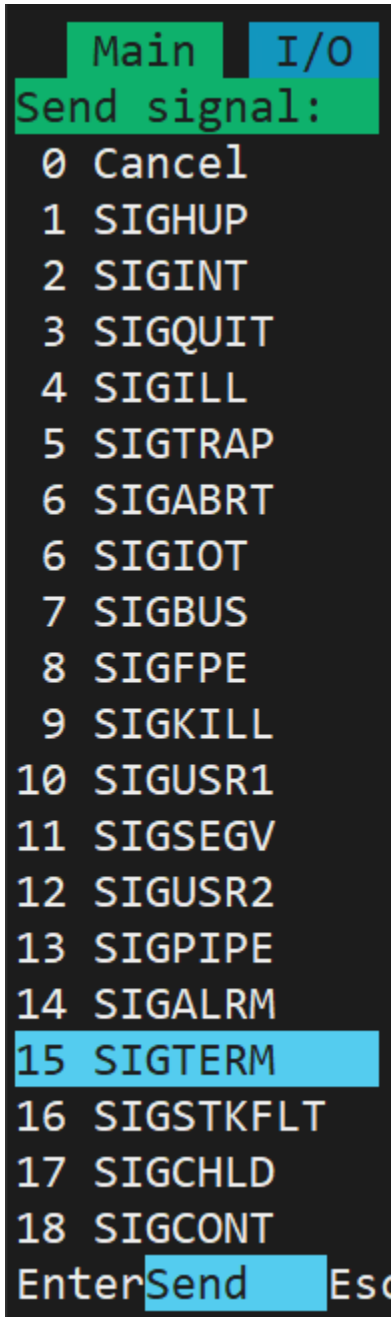

kill

UNIX-likes använder **kill** för att skicka signaler

```
nics@linux:~$ kill -L
 1) SIGHUP       2) SIGINT       3) SIGQUIT      4) SIGILL       5) SIGTRAP
 6) SIGABRT      7) SIGBUS       8) SIGFPE       9) SIGKILL     10) SIGUSR1
11) SIGSEGV     12) SIGUSR2     13) SIGPIPE     14) SIGALRM     15) SIGTERM
16) SIGSTKFLT   17) SIGCHLD     18) SIGCONT     19) SIGSTOP     20) SIGTSTP
21) SIGTTIN     22) SIGTTOU     23) SIGURG      24) SIGXCPU     25) SIGXFSZ
26) SIGVTALRM   27) SIGPROF     28) SIGWINCH    29) SIGIO       30) SIGPWR
31) SIGSYS      34) SIGRTMIN    35) SIGRTMIN+1  36) SIGRTMIN+2  37) SIGRTMIN+3
38) SIGRTMIN+4  39) SIGRTMIN+5  40) SIGRTMIN+6  41) SIGRTMIN+7  42) SIGRTMIN+8
43) SIGRTMIN+9  44) SIGRTMIN+10 45) SIGRTMIN+11 46) SIGRTMIN+12 47) SIGRTMIN+13
48) SIGRTMIN+14 49) SIGRTMIN+15 50) SIGRTMAX-14 51) SIGRTMAX-13 52) SIGRTMAX-12
53) SIGRTMAX-11 54) SIGRTMAX-10 55) SIGRTMAX-9  56) SIGRTMAX-8  57) SIGRTMAX-7
58) SIGRTMAX-6  59) SIGRTMAX-5  60) SIGRTMAX-4  61) SIGRTMAX-3  62) SIGRTMAX-2
63) SIGRTMAX-1  64) SIGRTMAX
```

kill

Ex.

```
nics@linux:~$ pidof vsftpd
2363
nics@linux:~$ sudo kill -TERM 2363
```

```
nics@linux:~$ sudo pkill -TERM vsftpd
```

List Open Files

Visa processer som använder filsystemet

```
nics@linux:~$ sudo lsof /srv/csi
COMMAND  PID    USER   FD   TYPE DEVICE SIZE/OFF   NODE NAME
vsftpd  5118 vagrant  rtd    DIR  253,0     4096 655362 /srv/csi
nics@linux:~$
```

Initialization System

Initialization System

Init är den första **demon** som startas efter *boot*…

Och den enda **demon** som startas utav *kärnan*

Ett **init system** startar, hanterar och avslutar andra **demoner**

Daemon

demon

[1]

- En bakgrundsprocess
- Hanteras utav ett **init system**

Ex.

```
nics@linux:~$ sudo systemctl list-units --type=service --state=running
 UNIT              LOAD   ACTIVE SUB     DESCRIPTION
 rsyslog.service loaded active running System Logging Service
 ssh.service     loaded active running OpenBSD Secure Shell server
 vsftpd.service  loaded active running vsftpd FTP server
```

Init Systems

UNIX **Sys**tem **V** Style **Init Systems**

b.la. Alpine, AIX, HP-UX, Solaris etc.

systemd[● ◀]

b.la. Debian, RHEL, SUSE etc.

Init System Similarities

Ex.

```
nics@SysV:~$ sudo /etc/init.d/daemon start
```

```
nics@SysV:~$ sudo service daemon start
```

```
nics@systemd:~$ sudo systemctl start daemon
```

SysV Init

SysV Init

Lista demoner:

```
nics@alpine:~$ doas service -l
<output-omitted>
```

Start, stop, restart & status:

```
nics@alpine:~$ doas service daemon stop
nics@alpine:~$ doas service daemon start
nics@alpine:~$ doas service daemon restart
nics@alpine:~$ service daemon status
 * status: started
```

Runlevels

Beskriver när **init systemet** ska starta en **demon**

```
nics@alpine:~$ rc-update show
 killprocs |                shutdown
  loadkmap | boot
      mdev |                         sysinit
   modules | boot
  mount-ro |                shutdown
networking | boot
 savecache |                shutdown
   seedrng | boot
      sshd |      default
      swap | boot
    sysctl | boot
    syslog | boot
```

Runlevels

Se till att **init** startar en **demon** vid boot:

```
nics@alpine:~$ doas rc-update add daemon
```

Ta bort **demonen** från auto-start:

```
nics@alpine:~$ doas rc-update del daemon
```

systemd

Unit files & Services

systemd kallar **demoner** för **services**

Vilka är definierade i **unit files**

```
nics@systemd:~$ less /lib/systemd/system/ssh.service
[Unit]
Description=OpenBSD Secure Shell server
Documentation=man:sshd(8) man:sshd_config(5)
After=network.target auditd.service
ConditionPathExists=!/etc/ssh/sshd_not_to_be_run

[Service]
EnvironmentFile=-/etc/default/ssh
ExecStartPre=/usr/sbin/sshd -t
ExecStart=/usr/sbin/sshd -D $SSHD_OPTS
ExecReload=/usr/sbin/sshd -t
```

systemd

Start, stop, restart & status:

```
nics@systemd:~$ sudo systemctl stop daemon
nics@systemd:~$ sudo systemctl start daemon
nics@systemd:~$ sudo systemctl restart daemon
nics@systemd:~$ sudo systemctl status daemon
<output-omitted>
```

Lista demoner:

```
nics@systemd:~$ systemctl list-units --type service
<output-omitted>
```

systemd

Se till att **init** startar en **demon** vid boot:

```
nics@alpine:~$ sudo systemctl enable daemon
```

Ta bort **demonen** från auto-start:

```
nics@alpine:~$ sudo systemctl disable daemon
```

Loggar

Varför loggar man?

- Möjliggör uppföljning, audit
- Informerar felsökning
- System för övervakning kan analysera loggar & generera larm utifrån dom

Loggar i Linux

Hanteras med:

- w
- who
- last
- dmesg
- syslog
- journald

Finns:

- Utspritt under /var/log/

Syslog

- Definierad i RFC 3164 & RFC 5424
- Tar in loggar från:
  kernel, daemons, user…
- Till flera destination:
  lokala filer och/eller syslog-server

Syslog Levels

Value	Severity	Description
0	**Emergency**	System is unusable
1	**Alert**	Action must be taken immediately
2	**Critical**	Critical conditions
3	**Error**	Error conditions
4	**Warning**	Warning conditions
5	**Notice**	Normal, but significant conditions
6	**Informational**	Informational messages
7	**Debug**	Debug-level messages

Syslog

```
nics@ubuntu:~$ ls /var/log/
alternatives.log  dpkg.log     syslog
apt/              faillog      syslog.1
auth.log          journal/     sysstat/
auth.log.1        kern.log     ubuntu-advantage.log
btmp              kern.log.1   unattended-upgrades/
dmesg             landscape/   vsftpd.log
dmesg.0           lastlog      vsftpd.log.1
dmesg.1.gz        private/     wtmp
```

Huvudloggfilen: /var/log/syslog

Autentiseringslogg: /var/log/auth.log

Syslog

```
nics@rhel:~$ ls /var/log/
anaconda/              dnf.rpm.log        README
audit/                 firewalld          rhsm/
boot.log               hawkey.log         samba/
boot.log-20240122      insights-client/   secure
btmp                   kdump.log          spooler
chrony/                lastlog            sssd/
cron                   maillog            tallylog
dnf.librepo.log        messages           tuned/
dnf.log                private/           wtmp
```

Huvudloggfilen: /var/log/messages

Autentiseringslogg: /var/log/secure

Visa Syslog-loggar

Använd inte en textredigerare!

```
nics@rhel:~$ sudo less /var/log/messages
nics@rhel:~$ sudo tail /var/log/messages
nics@rhel:~$ sudo tail -f /var/log/messages
```

less: g överst G nederst q quit

tail: -f follow new content

journald

- **systemd** logging daemon: **journald**
- **journalctl** visar loggar

Default visas alla loggar:

```
nics@systemd:~$ sudo journalctl
```

Kan filtrera på källa (**demon**):

```
nics@systemd:~$ sudo journalctl -u vsftpd
```

Med ’follow’:

```
nics@systemd:~$ sudo journalctl -fu vsftpd
```

Syslog & journald

- Fler distar använder båda: **journald** skickar vidare till **Syslog**
- Det tycks dock vara på väg att fasas ut t.ex. Debian

Syslog & journald

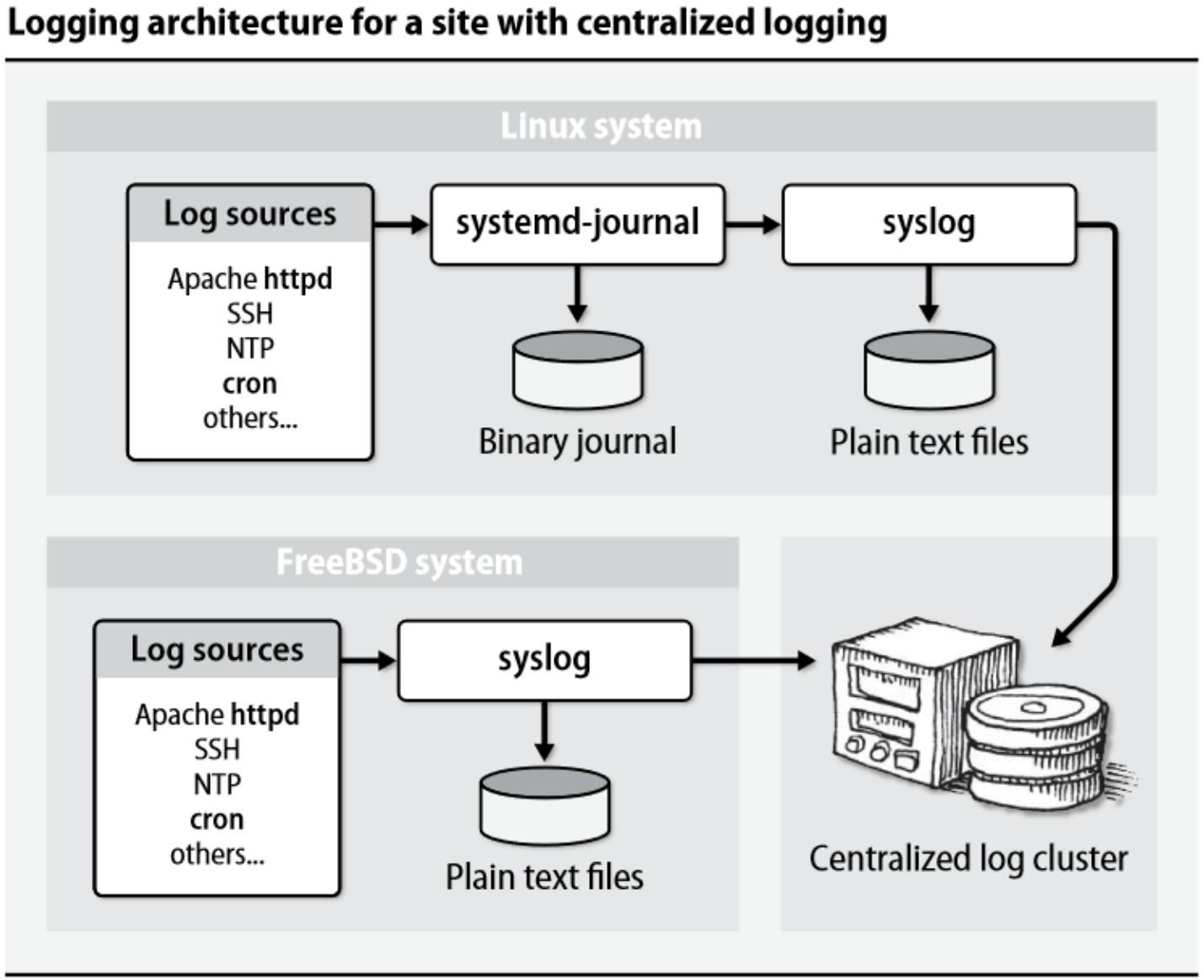

Logging architecture for a site with centralized logging, UNIX and Linux System Administration Handbook fifth edition pp. 296, by Evi Nemeth, Garth Snyder, Trent R. Hein, Ben Whaley & Dan Mackin, 2018, Pearson. Fair use/I enlighet med citaträtt.

Boot Process

Linux & UNIX boot process

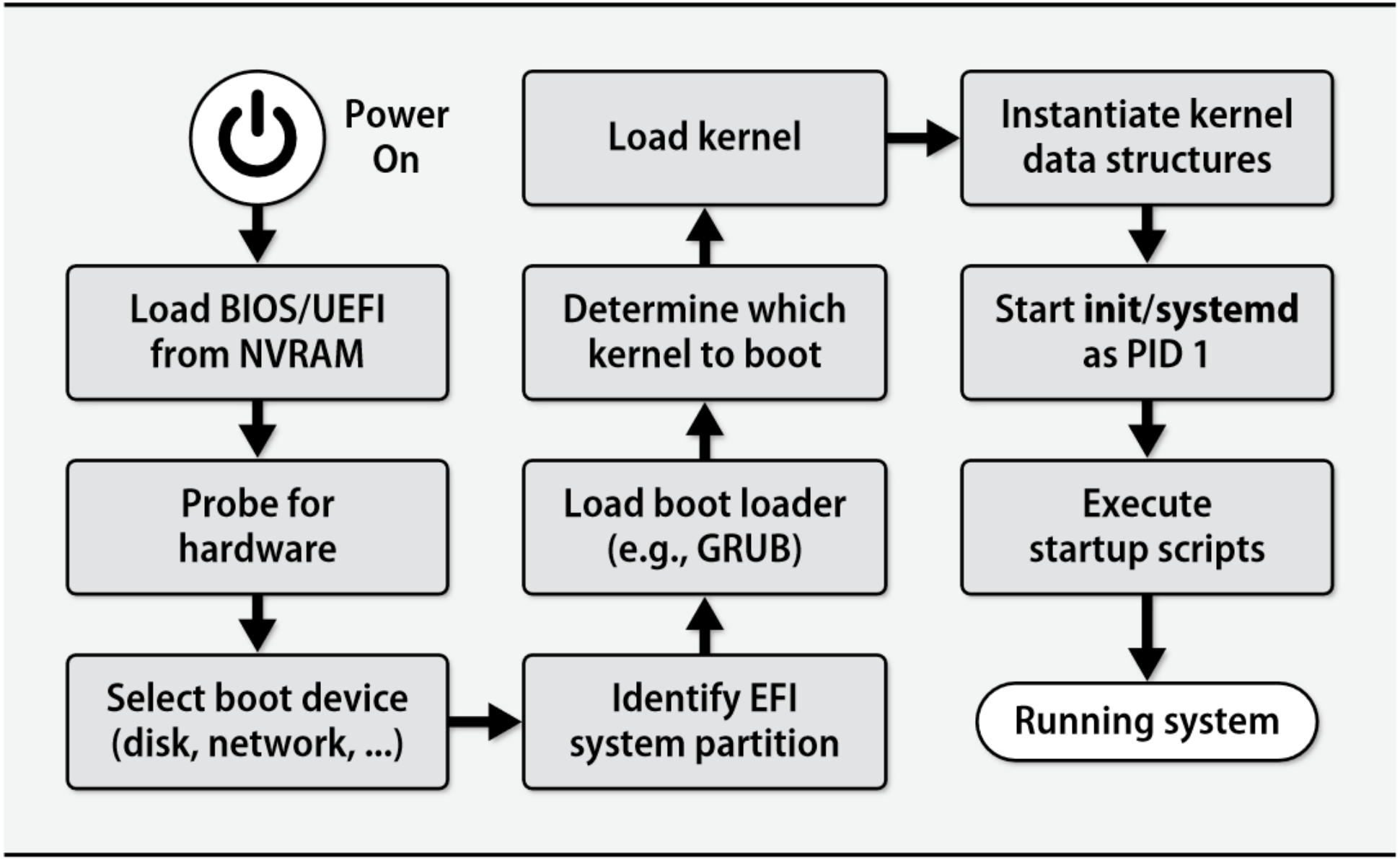

Linux & UNIX boot process, UNIX and Linux System Administration Handbook fifth edition pp. 31, by Evi Nemeth, Garth Snyder, Trent R. Hein, Ben Whaley & Dan Mackin, 2018, Pearson. Fair use/I enlighet med citaträtt.

Förenklad överblick

1. Firmware [BIOS/UEFI]
2. Boot Sector [MBR/GPT]
3. Boot Loader [GRUB]
4. Kernel [Linux]
5. Init System [systemd]

Firmware

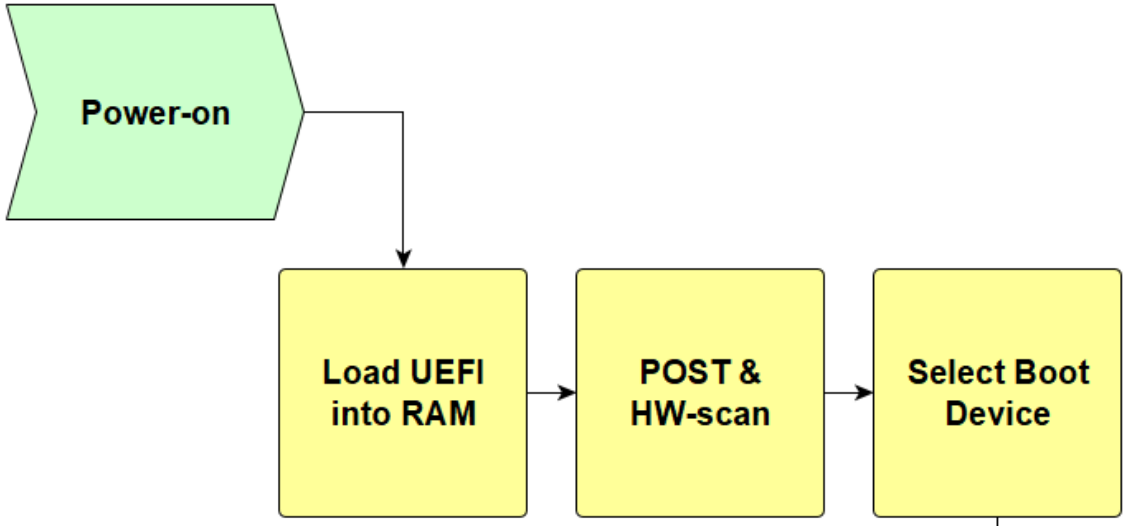

Boot Sector

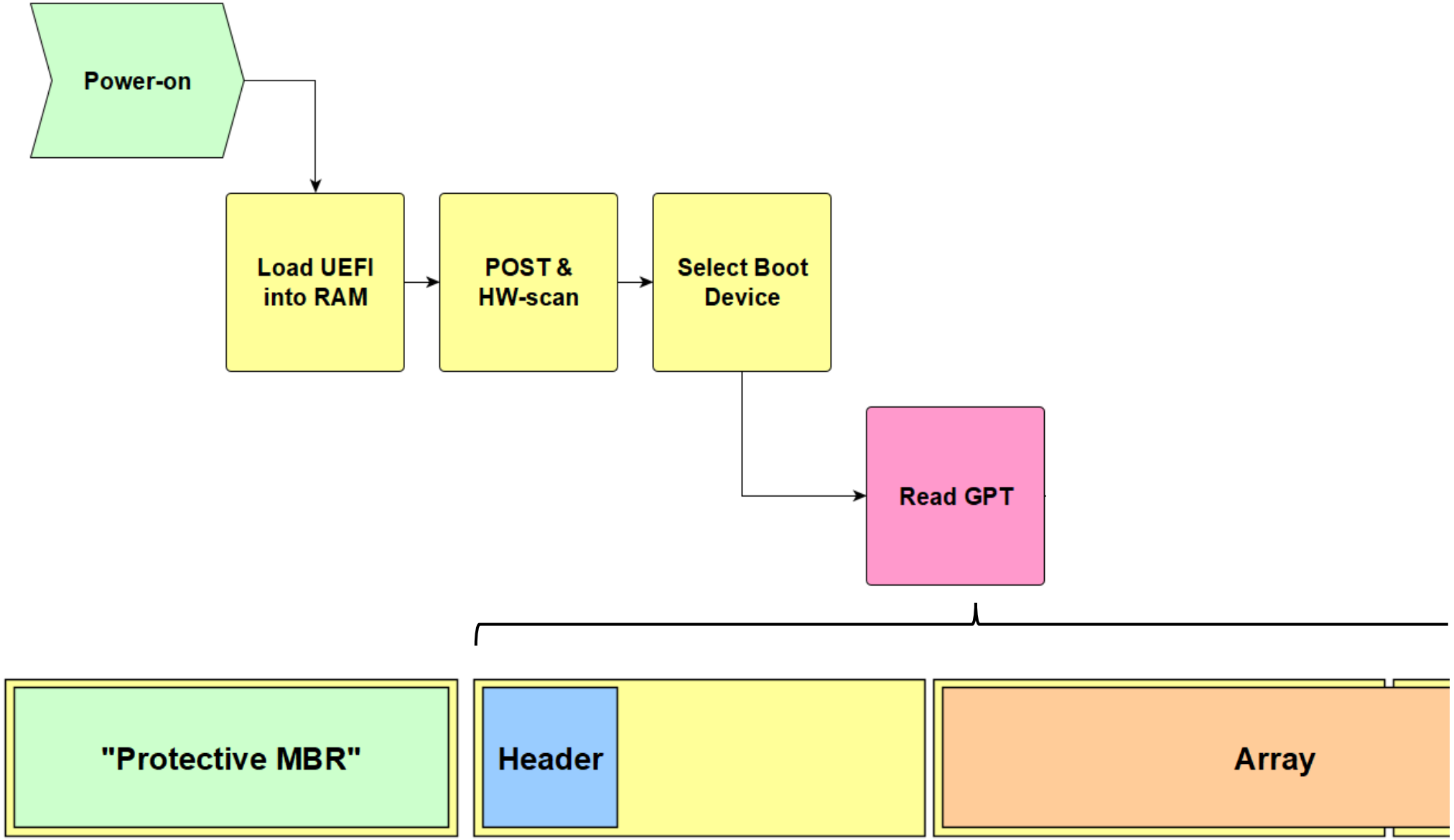
Power-on
Load UEFI into RAM
POST & HW-scan
Select Boot Device
Read GPT
"Protective MBR"
Header
Array

EFI Partition

Partitioners fysiska plats lagras i **GPT Array**

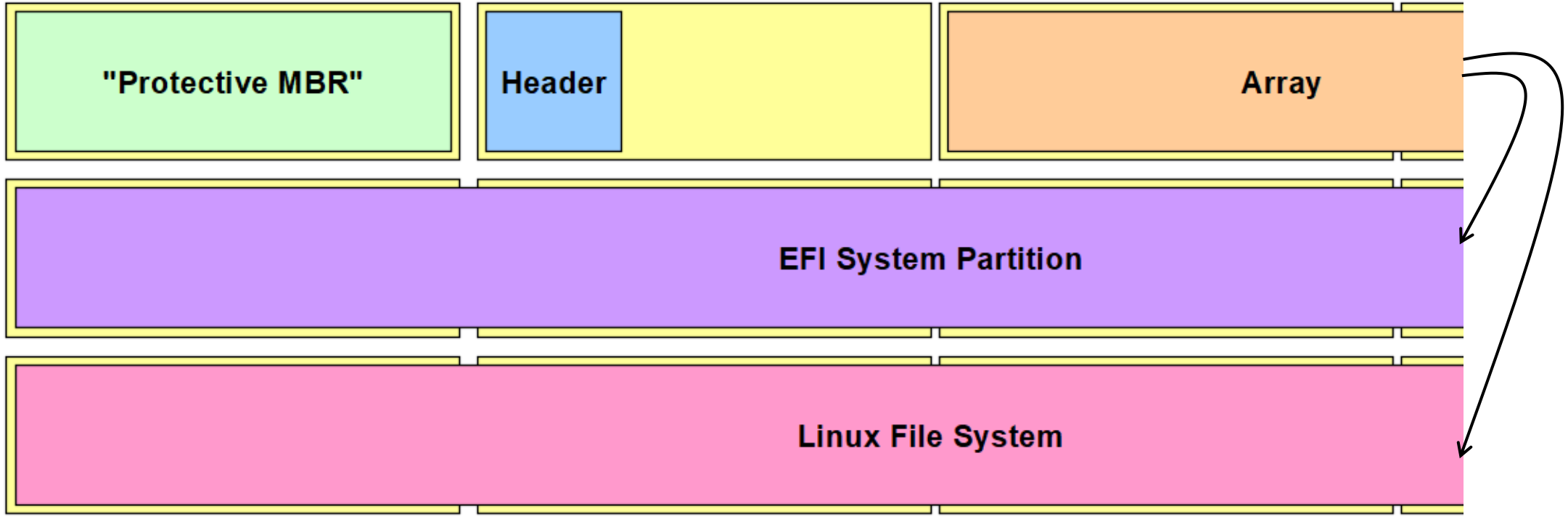

EFI Partition

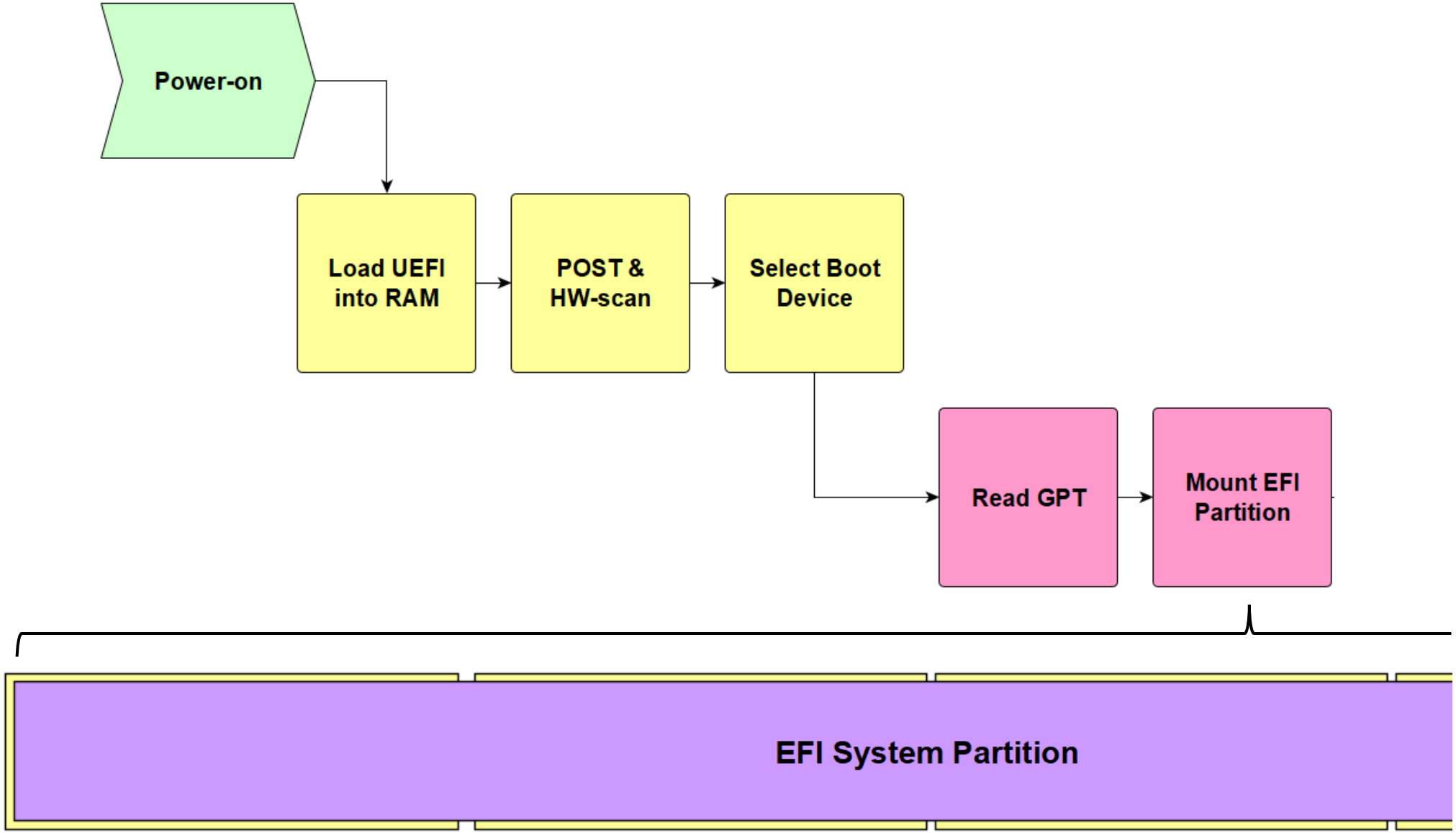

EFI Partition

```
root@linux:~# fdisk -l /dev/sda
<output omitted>
Device        Size   Type
/dev/sda1     512M   EFI System
/dev/sda2   18.5G   Linux filesystem
/dev/sda3     976M   Linux swap
```

?

Boot Loader

BIOS/UEFI bootar vanligtvis en **boot loader**

Vilken sedan bootar OS kärnan

- Mer flexibelt: flera installerade OS
- Enklare: underlättar OS utveckling & uppdateringar

Boot Loader

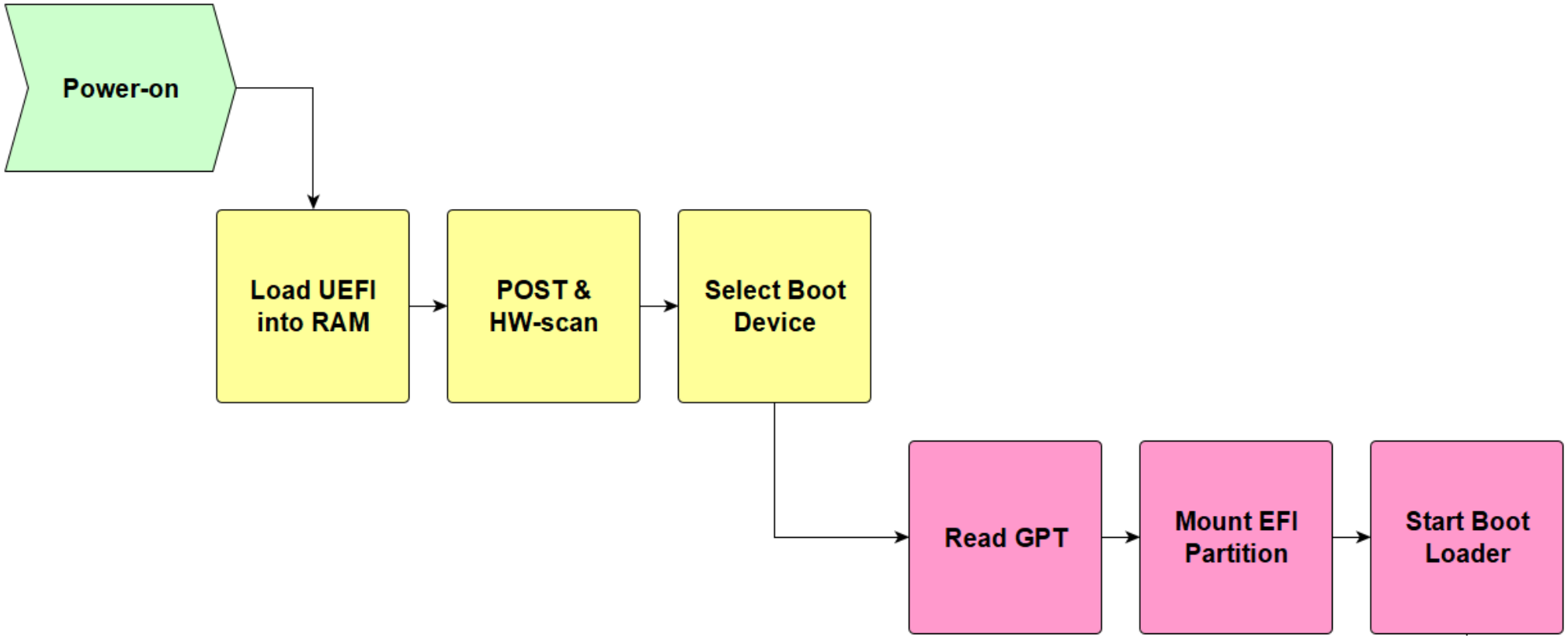
Power-on
Load UEFI into RAM
POST & HW-scan
Select Boot Device
Read GPT
Mount EFI Partition
Start Boot Loader

GNU Grand **U**nified **B**oot Loader

GNU GRUB 2.0

BIOS/MBR UEFI/MBR UEFI/GPT

GRUB 2.02 as seen in Debian Unstable, by Huihermit, 2015, Wikimedia Commons (https://commons.wikimedia.org/wiki/File:Debian_Unstable_GRUB2_(2015).png). GPLv2.

A larger version of the GNU GRUB logo (grub_logo.png), but without the text. The official GRUB website describes the smaller logo with text as "A GRUB logo by Karol Krenski.", by Karol Kreński, 2009, Wikimedia Commons (https://en.wikipedia.org/wiki/File:Grub_logo_large.png). Public domain.

A larger version of the GNU GRUB logo (grub_logo.png), but without the text. The official GRUB website describes the smaller logo with text as "A GRUB logo by Karol Krenski.", by Karol Kreński, 2009, Wikimedia Commons (https://en.wikipedia.org/wiki/File:Grub_logo_large.png). Public domain.

Kernel

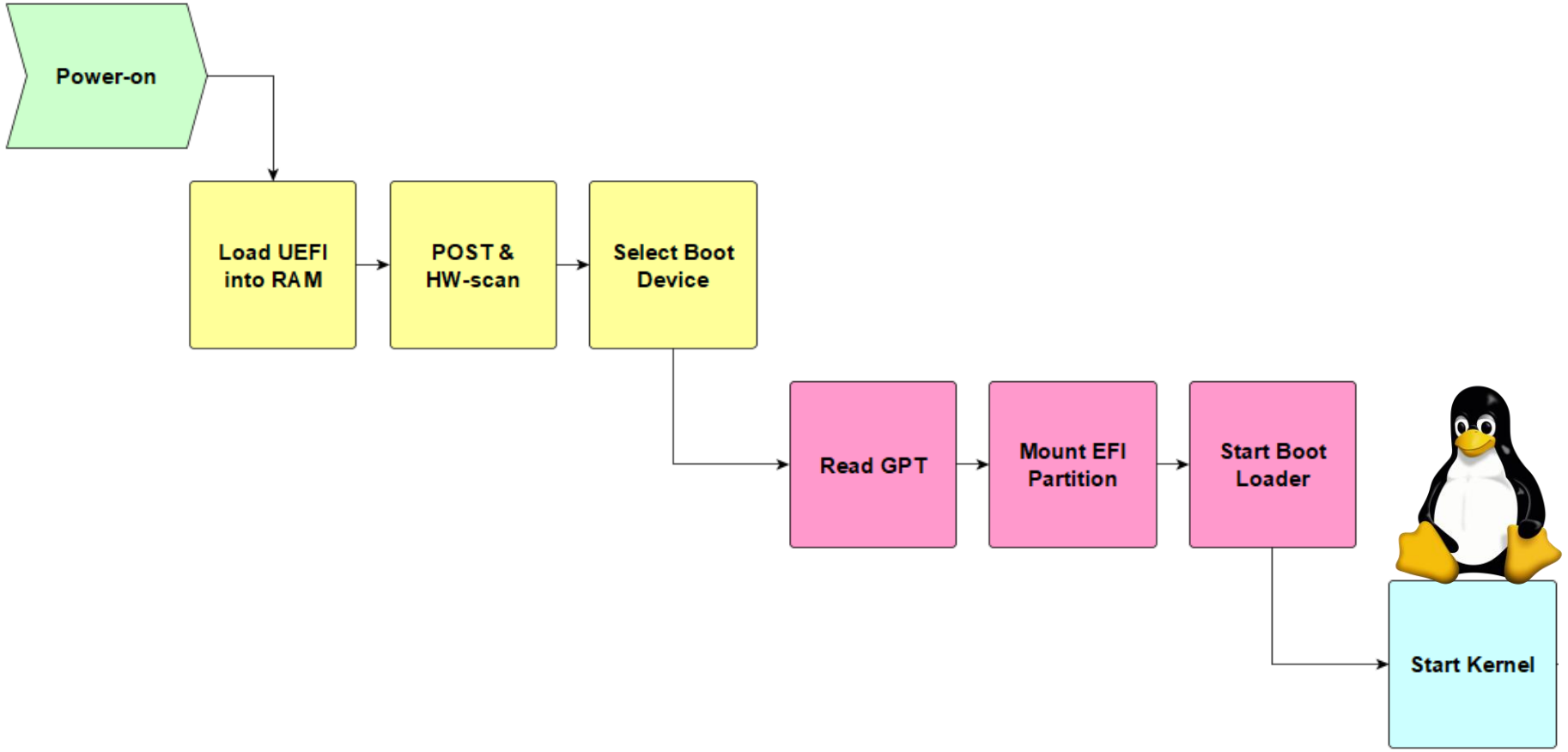

penguin Tux, the Linux Mascot, by Larry Ewing, Simon Budig, Garrett LeSage, Wikimedia Commons (https://commons.wikimedia.org/w/index.php?curid=753970). CC0 1.0 Universal Public Domain

Init System

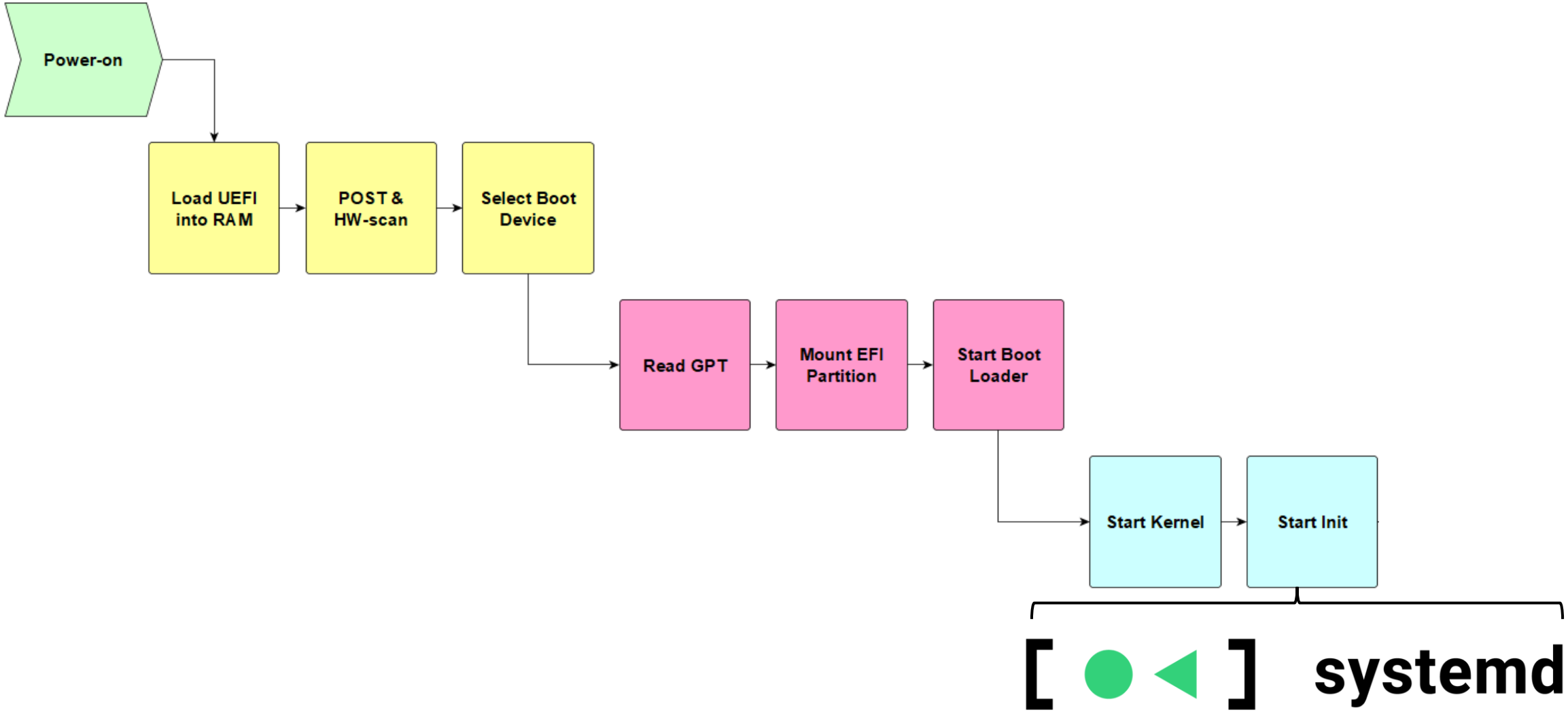
Power-on
Load UEFI into RAM
POST & HW-scan
Select Boot Device
Read GPT
Mount EFI Partition
Start Boot Loader
Start Kernel
Start Init
systemd

Daemons

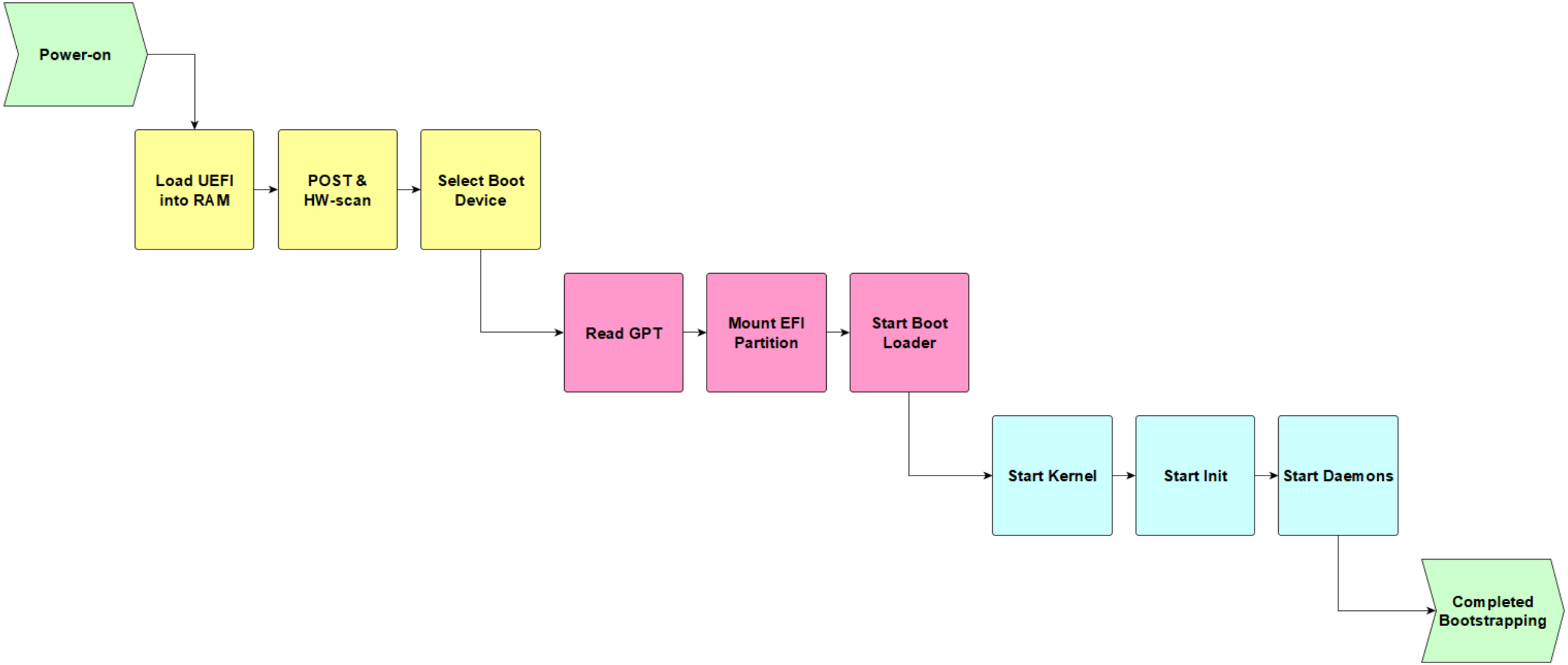
Power-on
Load UEFI into RAM
POST & HW-scan
Select Boot Device
Read GPT
Mount EFI Partition
Start Boot Loader
Start Kernel
Start Init
Start Daemons
Completed Bootstrapping

SSH Client

Secure **Sh**ell

Linux-servrar hanteras så gott som alltid med SSH

SSH

Fungerar som ett ramverk:

Mutual Authentication

Confidentiality Ciphers	Symmetric crypto.
Integrity MACs	MAC hash function
Key-Exchange KexAlgorithms	Diffie-Hellman
Server Authentication HostKeyAlogorithms	Asymmetric crypto.
User Authentication AuthenticationMethods	Password or asymmetric crypto.

Authentication

Autentisering

En metod för att verifiera ens identitet

Är du den du utger dig för att vara?

Authentication

Autentisering

Ex. användarnamn & lösenord

```
login as: admin
Keyboard-interactive authentication prompts from server:
| Password:
```

Lösenord:

En delad hemlighet mellan användaren & servern

Authentication

Autentisering

Ex. Certificate

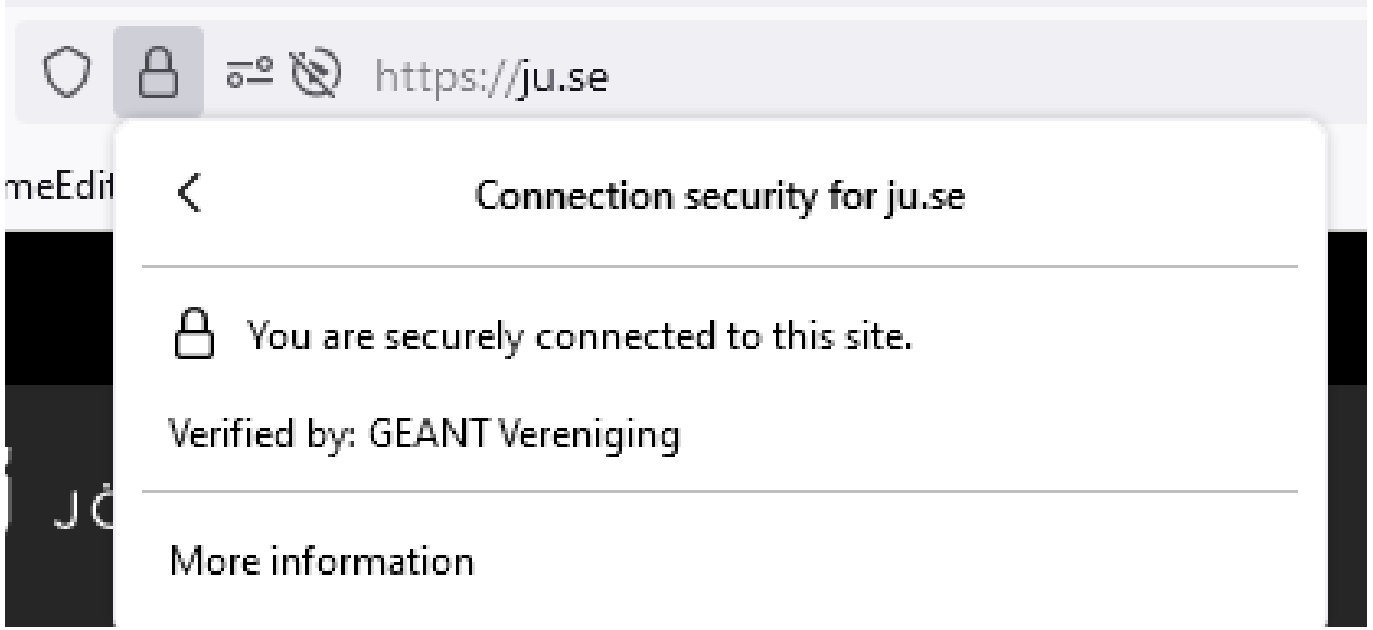

Certifikat:

Om ditt certifikat kan verifieras mot en betrodd tredje-part så har jag verifierat din identitet

SSH Server Authentication

Om serverns publika nyckel inte kan verifieras får du en varning

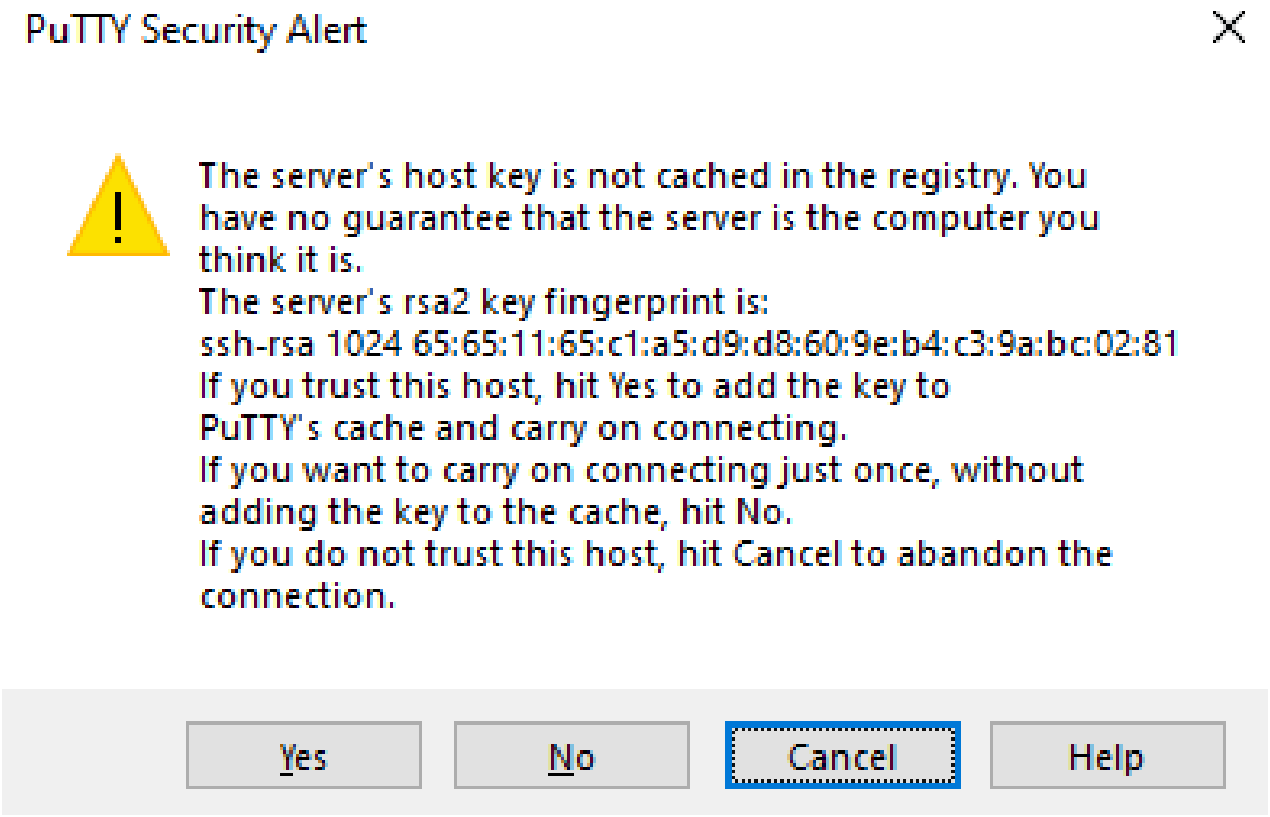

SSH Server Authentication

Vad innebär **Yes**?

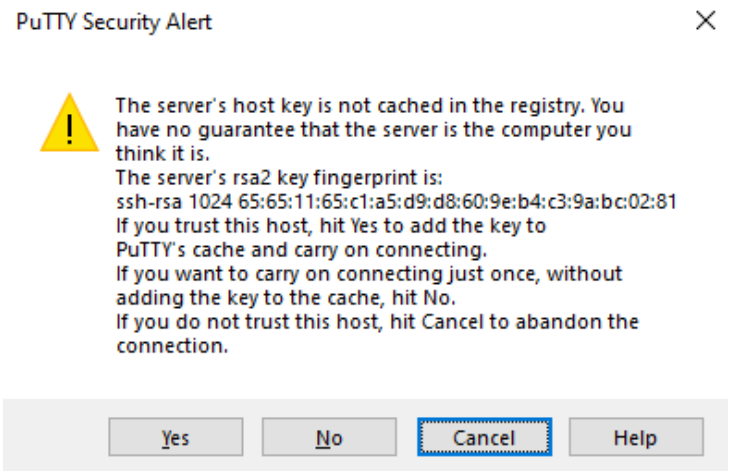

Vill du lita på servern ändå, och hädan efter kontrollera nyckeln mot en lokal kopia?

Manual Server Authentication

På klient:

```
C:\Users\Viktor> ssh nics@192.0.2.200
The authenticity of host '192.0.2.200 (192.0.2.200)' can't be established.
ED25519 key fingerprint is SHA256:SLlJO1gftszHOPwFhiaiQwhDMrQbIsGVhAiHoYlNIvQ.
Are you sure you want to continue connecting (yes/no/[fingerprint])? yes
Warning: Permanently added '172.23.121.200’ (ED22519) to the list of known hosts.
nics@192.0.2.200's password: CTRL-C
C:\Users\Viktor>
```

Manual Server Authentication

```
Warning: Permanently added '172.23.121.200’ (ED22519) to the list of known hosts.
nics@192.0.2.200's password: CTRL-C
C:\Users\Viktor>
C:\Users\Viktor> ssh-keygen -lvF 192.0.2.200
# Host 192.0.2.200 found: line 1
192.0.2.200 ED25519 SHA256:SLlJO1gftszHOPwFhiaiQwhDMrQbIsGVhAiHoYlNIvQ
+--[ED25519 256]--+
|     ...o.o   o  |
|  o   ..+. o o o |
|   + . =.o  + o  |
|    = . =... o   |
|     = .S+.      |
|    o   =.o .    |
|   . . o o.= o   |
|    E o  ..==o.  |
|         BBX*.   |
+----[SHA256]-----+
C:\Users\Viktor>
```

Manual Server Authentication

På Server

```
nics@linux:~$ ssh-keygen -lvE sha256
            -f /etc/ssh/ssh_host_ed25519_key.pub

256 SHA256:SLlJO1gftszHOPwFhiaiQwhDMrQbIsGVhAiHoYlN
+--[ED25519 256]--+
|     ...o.o   o  |
|  o   ..+. o o o |
|   + . =.o  + o  |
|    = . =... o   |
|     = .S+.      |
|    o   =.o .    |
|   . . o o.= o   |
|    E o  ..==o.  |
|          BBX*.  |
+----[SHA256]-----+
```

Livedemo

Server:

```
ssh-keygen -lvE hash -f public-key
```

Client:

```
ssh-keygen -lvF server-address
```

Till nästa gång

- Läs kurslitteraturen!
- Kika igenom grundkonfiguration!
- Se video-demos!
- Tisdag: föreläsning

Tack för idag

Bildreferenser

[1] J. Lasseter. *BSD daemon* [Online image]. (1984). Wikipedia. Available: https://en.wikipedia.org/w/index.php?curid=1193267. [Accessed: January 13, 2021]